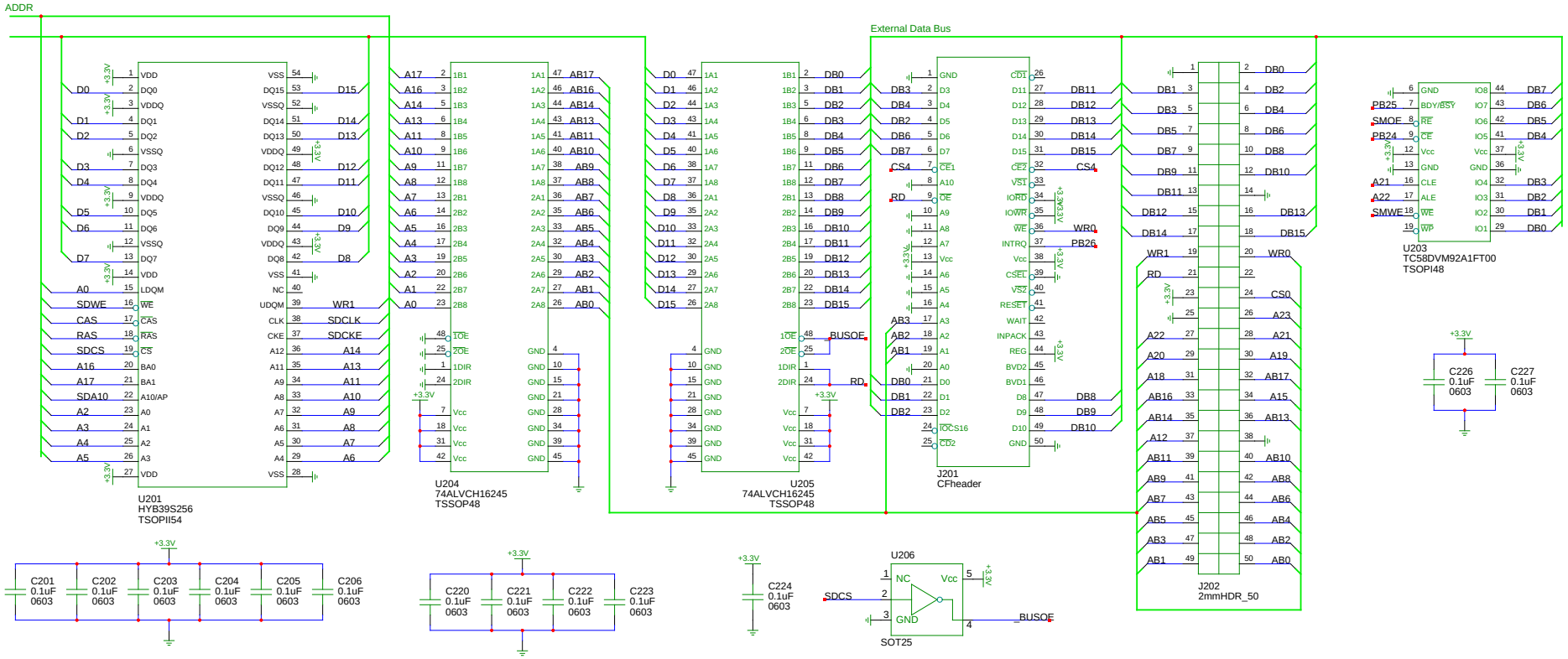

TITLE SBC Main memory and buffers

FILE: sbc/schem/memory.sch

REVISION: 07/20/2004

PAGE 2 OF 4

DRAWN BY: Darrell Harmon